DC液体泵 / DC Liquid Pump

DPE系列/series

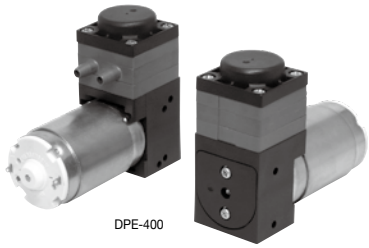
DPE-400

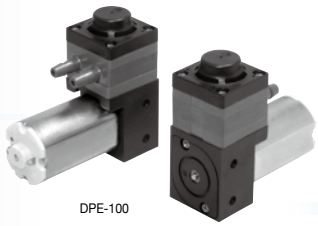
DPE-100

- 内置脉冲吸收室
- 可选择适合不同液体的多种构成材料
- 自吸式可抽吸空气

- Built-in Pulse Absorption Chamber
- Many build material options for different liquids
- Self-priming type with air suction acceptable

使用条件 / Conditions of Use	压电泵 / BIMOR PUMP
使用环境温度 / Ambient temperature	5~40℃※1
使用环境湿度 / Ambient humidity	35~85%※2
使用流体温度 / Fluid temperature	5~50℃

※1）不结冰 / No freezing　※2）不结露 / No condensation

典型的无脉冲吸收传统泵 / Typical Conventional Pump without Pulse Absorption

由于液体是通过泵和液体回路的吸入和排出通道进行输送的，因此会产生高脉动，从而导致在管道和配件内出现气穴和振动、峰值脉冲噪音、泵机构的应力和磨损增加。 这些负面结果往往会因使用转速相对较高的小型泵而增加。

As liquid is transported through the suction and discharge passages of the pump and liquid circuit, high pulsations can be created which can cause cavitation, vibration in tubing, fittings, peak pulsing noises, and added stress and wear to pump mechanisms. These negative results are often increased through the use of small pumps having relatively high rotational speeds.

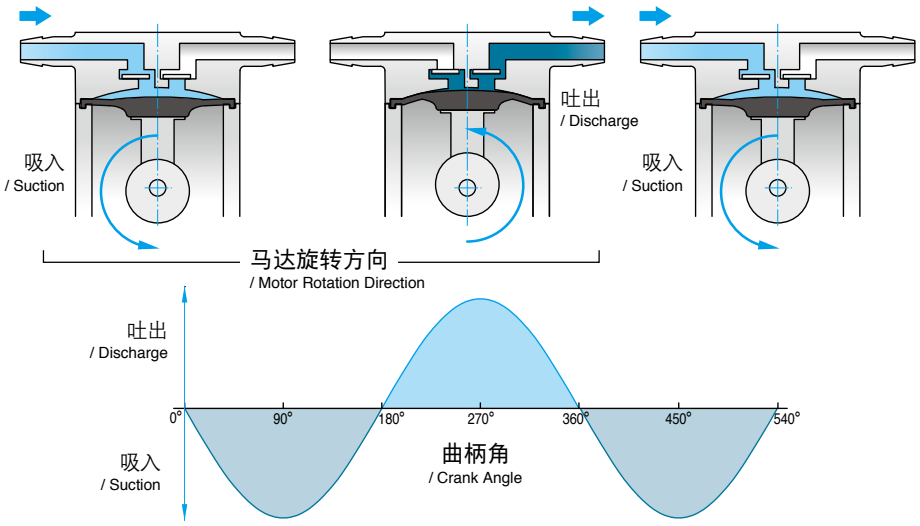

设计先进的脉冲吸收 DPE 泵 / Advanced design DPE Pump with Pulse Absorption

可使脉冲衰减，有助于产生稳态流、降低整个液体回路的噪音和振动，并提高泵和其他回路组件的使用寿命。 设计先进，脉动缓冲器无需额外的安装成本或空间。

① 吸入。

② 吐出。部分液体被输送至脉冲吸收室，而不是直接强制进入吐出口。

③ 进入泵的循环吸入与吐出同步。

通过②和③的处理，脉冲得到衰减。

Provides pulse attenuation which helps to create steady state flow, reduced noise and vibration throughout the fluid circuit, and enhances life of the pump and other circuit components. It's designed in. . . No need for additional installation cost or space with pulsation dampers.

① Suction.

② Discharge. Partial fluid delivery to pulse absorption chamber, not directly forced to outlet port.

③ Cyclical suction drawn into pump is synchronized with the discharge.

Pulses are attenuated through the process of ② and ③.

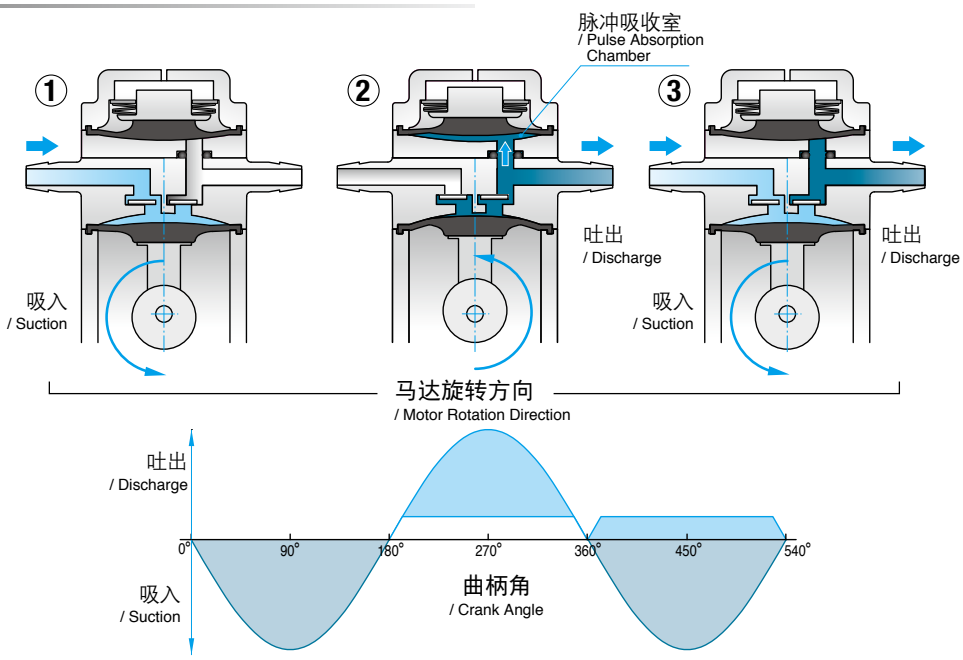

DC液体泵 / DC Liquid Pump

型式 DPE-400BL

有刷马达
/ Brush DC Motor
(12 V/24 V DC)

流量和电流 / Flow & Electric Current

流量特性图(25°C水)/ Flow Characteristics (Water at 25°C)

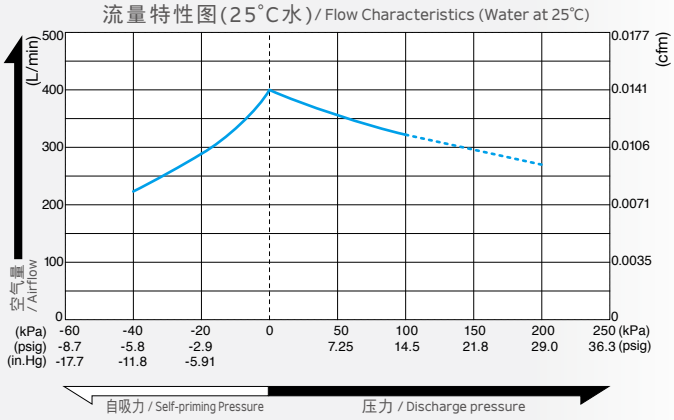

电流特性图 / Current Characteristics

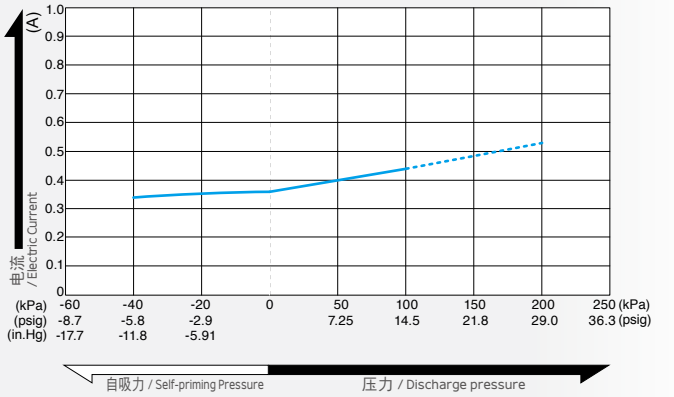

※ 特性图只是参考值，并不是保证值。
/The characteristic charts are for reference only and are not guaranteed.

规 格 / Specifications

额定电压 / Rated Voltage	12 V / 24 V DC
流量 / Flow Rate ※1	400 mL/min 0.0141 cfm
使用压力范围 / Working Pressure Range	0 ~ 100 kPa 0 ~ 1 bar 0 ~ 14.2 psig
最高压力 ※2 / Maximum Pressure	300 kPa 3 bar 42.7 psig
最大电流 / Maximum Current	900 mA / 450 mA
额定时间 / Duty Cycle	连续 / Continuous
耐用时间 (MTTF) ※3 / Rated Performance (MTTF)	6,000 小时 / hours
自吸力 ※1 / Self-priming Pressure	40 kPa 0.4 bar 5.69 psig
吸入口尺寸 / Inlet	ϕ5.4 mm (外径) 直管接头 / 5.4 mm O.D. straight barb
吐出口尺寸 / Outlet	ϕ5.4 mm (外径) 直管接头 / 5.4 mm O.D. straight barb
线圈绝缘等级 / Coil Insulation Class	相当于 A 类 / A class equivalent
安装尺寸 / Mounting Dimensions	41 (W) mm 1-39/64 "(W)
本体重量 / Weight	230 g 0.507 Lbs
马达 / Motor	DC 有刷马达 / Brush DC Motor

※1: 低温时性能可能会降低。 ※2: 高背压时泵可能无法重新启动。
※3: 耐用时间基于以下条件：额定电压：24 V DC，大气压：0 kPa，流体 :25°C水
※1. At low temperature, the performance may reduce.
※2. Pumps may not re-start against high backpressure.
※3. Life expectancy is based on the following conditions: Rated voltage: 24 V DC, Atmospheric pressure: 0 kPa, Fluid: water at 25°C

构成材料和适用流体 / Build materials and applicable fluids

型式 / Model	缸盖 /Cylinder Head	缸盖罩 / Diaphragm	隔膜 / Diaphragm	阀 / Valve	O形环 / O-ring	适用流体 / Applicable fluids
DPE-400BL-2E	PA 聚酰胺(尼龙) / Polyamide (Nylon)		PTFE 聚四氟乙烯 / Polytetrafluoroethylene	EPDM 乙丙橡胶 / Ethylene-propylene rubber		苛性苏打、柠檬酸、氨水、苛性钾 / Sodium hydroxide, Citric acid, Ammonia water, Caustic potash
DPE-400BL-2G						
DPE-400BL-7G	PPS 聚苯硫醚 / Polyphenylene sulfide			FKM 氟橡胶 / Fuluoro rubber		乙醇、乙二醇、碳酸钠、矿物油 / Ethanol, Ethylene glycol, Sodium carbonate, mineral oil
DPE-400BL-7P				FFKM 全氟橡胶 / Perfluoroelastomer		二甲苯、四氯化碳、三氯乙烯、硅油 / Xylene, Carbon tetrachloride, Trichloroethylene, Silicon oils 三氯甲烷、苯、冰醋酸、丁酮 / Chloroform, Benzene, Glacial acetic acid, Methyl ethyl ketone

用途例 / Application Examples

- 液体分析仪（例如，医疗、食品、水处理和环境）。
- 过滤、取样、灭菌器和洗涤器中的液体输送。
- 工业喷墨打印机中的墨水输送。

- Liquid analytical instruments e.g. medical, food, water treatment & environmental.
- Liquid transport within filtration, sampling, sterilizers and washers.
- Ink transport within industrial ink-jet printers.

外形及安装尺寸图 / Dimensional Outline Drawing (单位 / Unit : mm)